Engineered Sound®

ES915/C

Cardioid Condenser Adjustable-length Gooseneck Microphone

[Description]

The ES915/C is a wide-range condenser microphone with a cardioid polar pattern. It is designed for quality sound reinforcement, professional recording, television and other demanding sound pickup applications. The small-diameter, alternating adjustable-length gooseneck design permits highly flexible positioning while maintaining a smooth, well-contoured appearance. An included snap-on foam windscreen effectively reduces noise from wind or ventilation air currents.

The cardioid polar pattern provides a 120° angle of acceptance. Additional interchangeable elements with hypercardioid (100°) and MicroLine® (90°) pickup patterns are available.

The integral power module can be powered from any external 11V to 52V DC phantom power supply. A recessed switch in the power module permits choice of flat response or low-frequency roll-off to help control undesired ambient noise.

The microphone is enclosed in a rugged housing with a low-reflectance black finish. It features an XLRM-type connector insert at its base, allowing it to be plugged directly into an XLRF-type panel jack or microphone cable. In addition to an AT8658 heavy-duty shock mount, an AT8651 thread-mount adapter is included to permit attachment of the XLR mic base to a standard 5/8"-27 threaded mic stand or mounting flange.

[Installation and Operation]

Output is low impedance balanced. The output connector mates with XLRF-type cable connectors. The balanced signal appears across Pins 2 and 3, while the ground (shield) connection is Pin 1. Output is phased so that positive acoustic pressure produces positive voltage at Pin 2, in accordance with industry convention.

The microphone can be mounted on a podium or desktop with the included AT8658 shock mount. A special isolator attenuates noise, shock and vibration transmitted through the mounting surface. Installation details are provided on the back of this sheet.

The microphone can also be mounted using the AT8651 mounting adapter. The microphone inserts directly into the XLRF-type connector end of the adapter, while the other end is 5/8"-27 threaded to allow connection to a standard microphone desk/floor stand, or a mounting flange on a podium or desktop. To install: Disassemble the XLRF insert from the adapter body. Route the mic cable (2-conductor shielded, not supplied) either through the side hole or from the bottom of the adapter body. If the side hole is used, the diameter of the cable should be 0.2" (5 mm) maximum. Solder the conductors to the XLRF insert using Pin 1 as ground (shield), Pin 2 as positive (signal hot), and Pin 3 as negative (signal common). Reassemble the adapter mount and test the wiring.

The provided snap-on foam windscreen simply slips over the element, effectively reducing wind noise or "popping" when used extra close.

The small-diameter goosenecks are easy to manipulate for proper positioning. Heavily lubricated, they operate smoothly and quietly. Should the unit become noisy with prolonged use, apply a light machine oil directly on the gooseneck area affected.

While a modern condenser microphone is not unduly sensitive to the environment, temperature extremes can be harmful. Exposure to high temperature can result in gradual and permanent reduction of the output level. Avoid leaving the microphone in the open sun or in areas where temperatures exceed 110° F (43° C) for long periods of time. Extremely high humidity should also be avoided.

[Architects and Engineers Specifications]

The microphone shall be a fixed-charge condenser with a frequency response of 30 Hz to 20,000 Hz and a cardioid polar pattern with uniform 120° angle of acceptance. It shall be capable of accepting optional interchangeable elements for additional polar patterns. It shall operate from an external 11V to 52V DC phantom power source. It shall be capable of handling sound input levels up to 138 dB with a dynamic range of 109 dB. Nominal open-circuit output voltage shall be 10.0 mV at 1 kHz, 1 Pascal. Output shall be low impedance balanced (250 ohms).

The microphone shall be a small-diameter alternating gooseneck design with an integral adjustable-length section. The entire mechanical assembly shall operate smoothly and quietly for positioning.

The microphone shall have a self-contained power module with an XLRM-type connector at the base for direct connection to a mating XLRF-type panel jack or cable connector. The power module shall include a recessed switch for low-frequency roll-off. A shock mount shall be supplied for mounting in a solid surface. An included mounting adapter shall permit attaching the microphone directly to a standard 5/8"-27 thread. A snap-on foam windscreen shall also be included.

The microphone's overall length shall be adjustable from 13.98" (355.0 mm) to 16.73" (425.0 mm). Head diameter shall be 0.33" (8.4 mm). The microphone weight shall be 4.4 oz (125 grams). Finish shall be low-reflectance black.

The Audio-Technica ES915/C is specified.

audio-technica®

[ES915/C Specifications†]

Element	Fixed-charge back plate permanently polarized condenser
Polar Pattern	Cardioid
Frequency Response	30-20,000 Hz
Low-frequency Roll-off	80 Hz, 12 dB/octave
Open Circuit Sensitivity	–40 dB (10.0 mV) re 1V at 1 Pa*
Impedance	250 ohms
Maximum Input Sound Level	138 dB SPL, 1 kHz at 1% T.H.D.
Dynamic Range (Typical)	109 dB, 1 kHz at Max SPL
Signal-to-noise Ratio[1]	65 dB, 1 kHz at 1 Pa*
Switch	Flat response, low-roll-off (recessed)
Phantom Power Requirements	11-52V DC, 4 mA typical
Weight	4.4 oz (125 grams)
Dimensions	13.98" (355.0 mm) to 16.73" (425.0 mm) long, 0.33" (8.4 mm) head diameter, 0.74" (18.9 mm) base diameter
Output Connector	Integral 3-pin XLRM-type
Accessories Furnished	AT8109 snap-on foam windscreen; AT8651 thread-mount adapter; AT8658 shock mount
Optional Interchangeable Elements	ESE-H hypercardioid (100°) ESE-ML MicroLine® (90°)

† In the interest of standards development, A.T.U.S. offers full details on its test methods to other industry professionals on request.

* 1 Pascal = 10 dynes/cm² = 10 microbars = 94 dB SPL

[1] Typical, A-weighted, using Audio Precision System One.

Specifications are subject to change without notice.

[Polar Pattern]

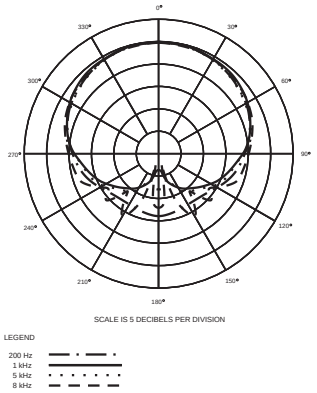

[Frequency Response]

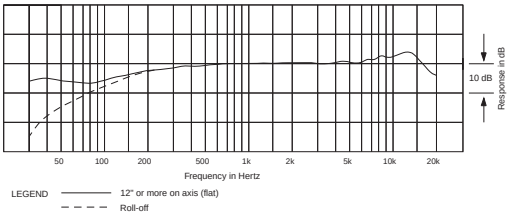

[Shock Mount Installation]

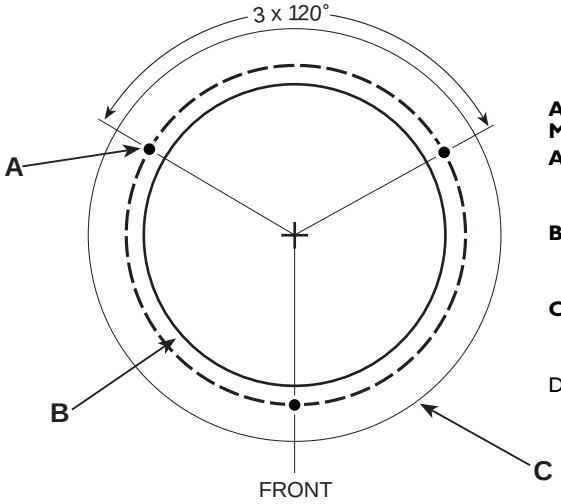

AT8658
Mounting Dimensions

A. 1/16" (1.5 mm) pilot holes 3 places on 2 1/2" (64 mm) circle.

B. 2 1/4" (57 mm) thru-hole for mount clearance.

C. Outside edge of flange, 3.07" (78 mm) diameter.

Drawing not actual size.

1. Locate the center of the mounting location and mark it. ***Allow enough clearance to accommodate the shock mount's flange on the desired surface and make certain there are no physical obstructions below the desired location.***
2. Using a 2 1/4" (57 mm) hole saw, drill the large through-hole for the shock mount.
3. Set the shock mount into the hole and mark the location of the three mounting screw holes. ***Make certain to "center" the mount in the large hole before marking the three small mounting screw locations.***
4. Using a 1/16" (1.5 mm) drill bit, drill three pilot holes for the mounting screws.
5. After installing the microphone, assure maximum shock mount effectiveness by providing some slack in the connecting cable.

[Dimensions]

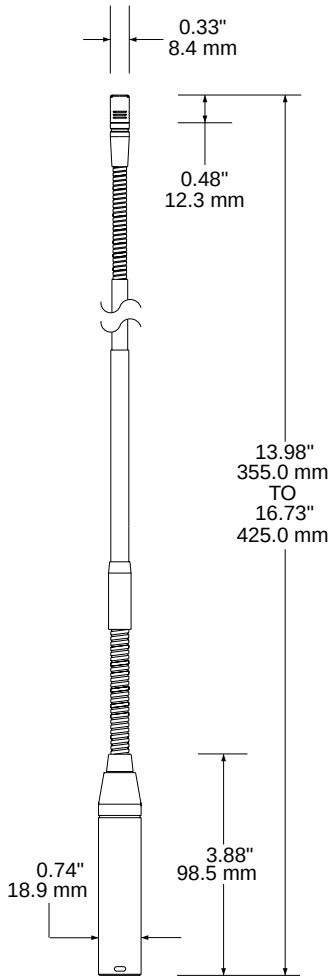

[Visit our Web site at www.audio-technica.com]

One-Year Limited Warranty

Audio-Technica microphones and accessories purchased in the U.S.A. are warranted for one year from date of purchase by Audio-Technica U.S., Inc. (A.T.U.S.) to be free of defects in materials and workmanship. In event of such defect, product will be repaired promptly without charge or, at our option, replaced with a new product of equal or superior value if delivered to A.T.U.S. or an Authorized Service Center, prepaid, together with the sales slip or other proof of purchase date. ***Prior approval from A.T.U.S. is required for return.*** This warranty excludes defects due to normal wear, abuse, shipping damage, or failure to use product in accordance with instructions. This warranty is void in the event of unauthorized repair or modification.

For return approval and shipping information, contact the Service Department, Audio-Technica U.S., Inc., 1221 Commerce Drive, Stow, Ohio 44224.

Except to the extent precluded by applicable state law, ***A.T.U.S. will have no liability for any consequential, incidental, or special damages; any warranty of merchantability or fitness for particular purpose expires when this warranty expires.***

This warranty gives you specific legal rights, and you may have other rights which vary from state to state.

Outside the U.S.A., please contact your local dealer for warranty details.

audio-technica®

Audio-Technica U.S., Inc.
1221 Commerce Drive, Stow, Ohio 44224

Form No. 0309-2101-01-B/W P51259-01 © 2002 Audio-Technica U.S., Inc. Printed in U.S.A.